KENSINGTON

JEAN-MARIE MASSAUD (2018)

DESCRIPTION

Imposing in proportions, sober and viscerally sculptural thanks to the typical structure of an art foundry and at the same time a welcoming reception table: Kensington, design Jean-Marie Massaud, is above all an object that conveys strong emotions.

Poliform

KENSINGTON

JEAN-MARIE MASSAUD (2018)

TECHNICAL DESCRIPTION

Typology
Table

Legs
aluminium casting in laquer - spatula effect painted

Top
honeycomb panel with solid wood frame in laquer - spatula effect painted frame

Insert
medium-density fibre panel in veneer - glass - marble

Poliform

KENSINGTON

JEAN-MARIE MASSAUD (2018)

TKN260

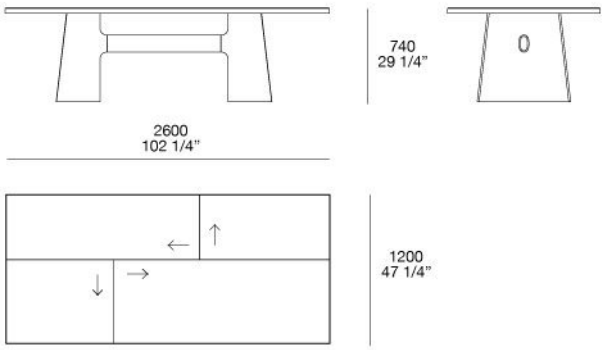

TKN300

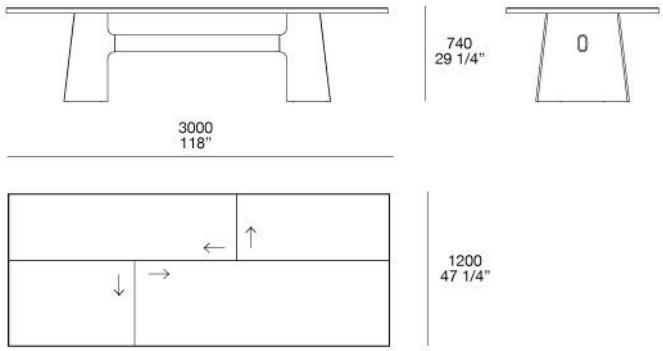

TKN160

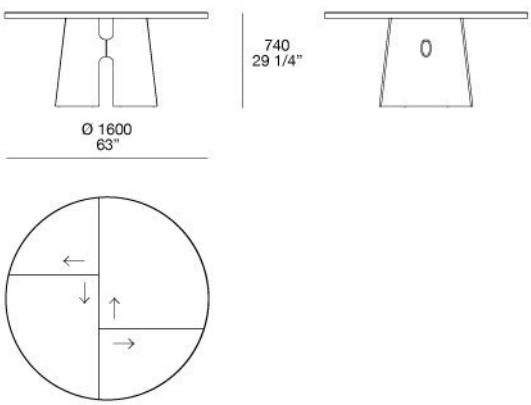

TA200

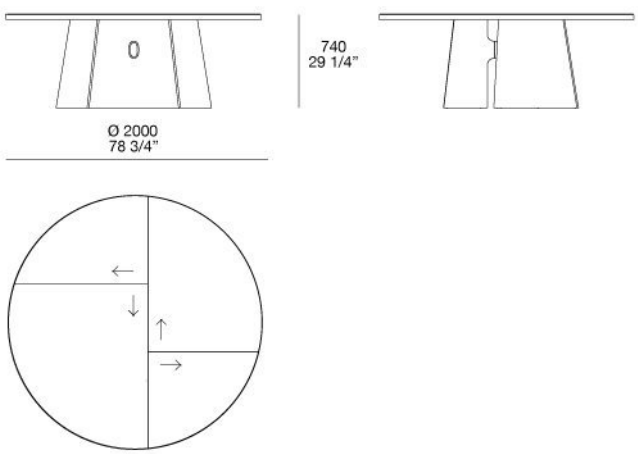

Poliform

KENSINGTON

FINISHINGS\STRUCTURE\LACCATO OPACO CHAMPAGNE (1)

MAT
LACQUERED
CHAMPAGNE

KENSINGTON

FINISHINGS\STRUCTURE\BRUSHED METAL (2)

FERRO

BRONZO

KENSINGTON

FINISHINGS\TOP\WOODS (1)

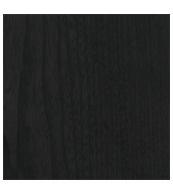

BLACK ELM

KENSINGTON

FINISHINGS\TOP\MARBLE (9)

BIANCO
CARRARA
EMBOSSED

GRIGIO
STARDUST
EMBOSSED

CALACATTA
ORO
EMBOSSED

BIANCO
CARRARA
GLOSSY

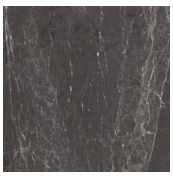

GRIGIO
STARDUST
GLOSSY

CALACATTA
ORO GLOSSY

NOIR SAINT
LAURENT
GLOSSY

SAHARA
NOIR
GLOSSY

SAHARA
NOIR
EMBOSSED

Poliform